OPT1845 Pole Hedge Trimmer XXX

5133002523 - OPT1845 - 4000444452

RYOBI

4000444451
4000444452

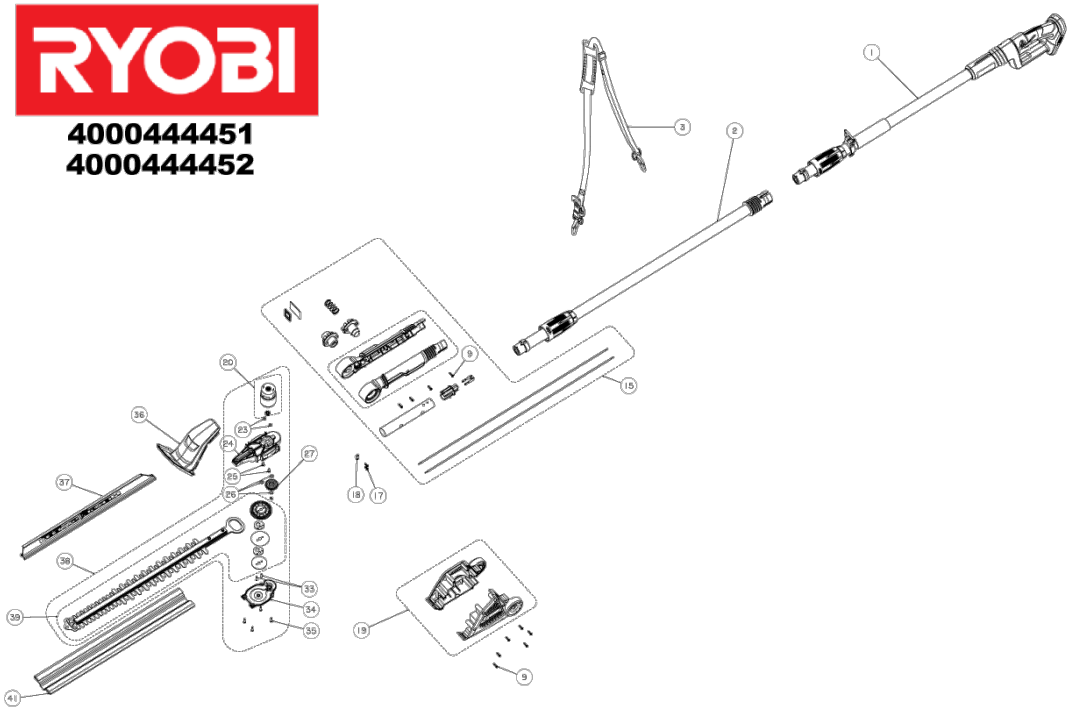

Position	Quantity	Description	Part number	EAN
001	1	TUBE	5131033439	4002395161164
002	1	TUBE	5131033440	4002395161171
003	1	HARNESS ASSEMBLY	5131033441	4002395161188
009	10	SCREW	5131035877	4058546152673
015	1	POLE HOUSING ASSY	5131033442	4002395161195
017	2	SCREW	5131000000	
018	1	PLATE	5131035117	4058546146214
019	1	MOTOR HOUSING	5131033444	4002395161812
020	1	MOTOR	5131033445	4002395161829
023	2	FLAT WASHER	5131033446	4002395161836
024	1	GEAR BOX BASE INSERT	5131033447	4002395161843
025	2	SCREW	5131000000	
026	3	WASHER OGS1820	5131034707	4058546143046
027	1	PINION	5131000000	
033	2	PIN	5131000000	
034	1	GEAR BOX COVER	5131033634	4002395148806
035	4	SCREW	5131016161	4058546019990
036	1	MOTOR COVER	5131033450	4002395161874
037	1	HEDGE SWEEP	5131033451	4002395161881
038	1	MOTOR COMPLETE	5131033452	4002395161898
039	1	BLADE	5131033453	4002395162505
041	1	BLADE PROTECTION	5131033454	4002395162512